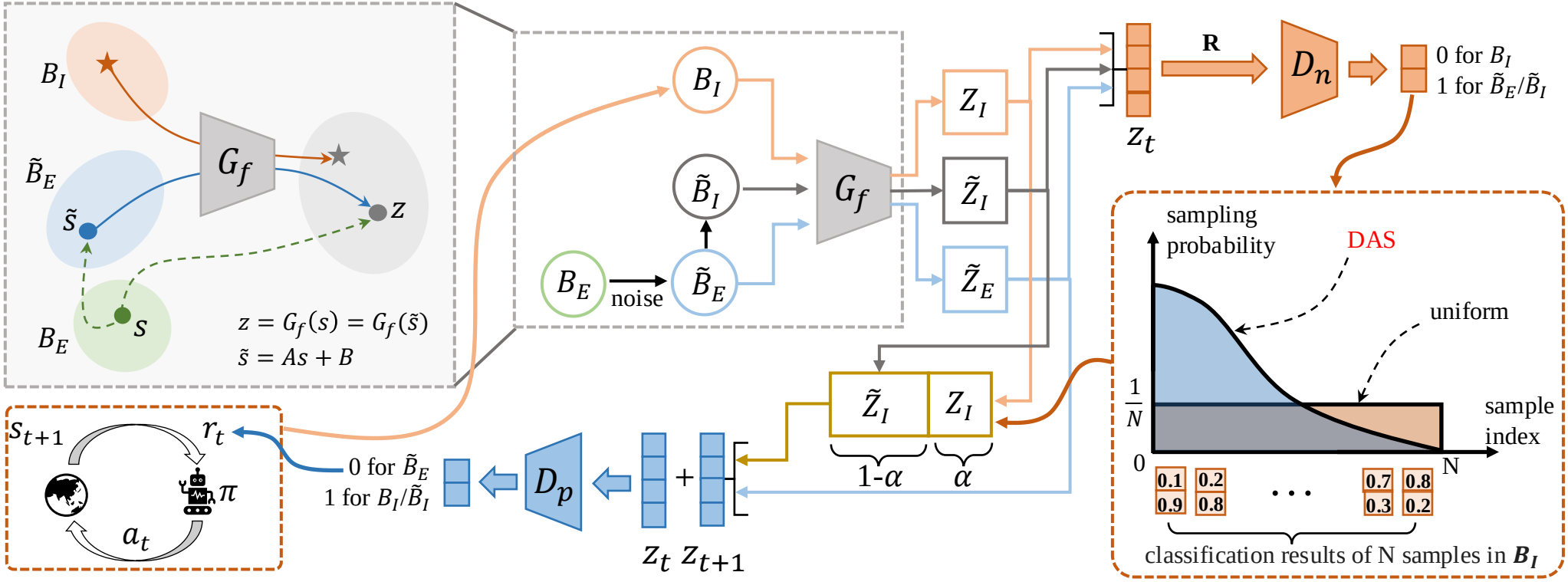
B_I
$\tilde{B}_E$
$\tilde{s}$
G_f
z
B_E
s
$z = G_f(s) = G_f(\tilde{s})$
$\tilde{s} = As + B$
B_I
$\tilde{B}_I$
B_E
noise
$\tilde{B}_E$
G_f
Z_I
$\tilde{Z}_I$
$\tilde{Z}_E$
z_t
R
D_n
0 for B_I
1 for $\tilde{B}_E/\tilde{B}_I$
sampling probability
DAS
uniform
$\frac{1}{N}$
0
N
sample index
0.1 0.9
0.2 0.8
0.7 0.3
0.8 0.2
classification results of N samples in $\boldsymbol{B_I}$
$\tilde{Z}_I$
Z_I
1-α
α
s_{t+1}
r_t
π
a_t
0 for $\tilde{B}_E$
1 for $B_I/\tilde{B}_I$
D_p
z_t z_{t+1}